hansgrohe

PuraVida
Overhead shower 400 1jet with shower arm
Surfaces: **White/Chrome** Article Number: **27437400**

Description

product features

- shower head size: 390 x 260 mm
- shower arm length: 390 mm
- spray type: RainAir
- flow rate RainAir spray (at 0.3 MPa): 21 l/min
- spray disc surface in two variants: chrome or white
- material spray disc: metal
- installation: wall
- connection thread G ½
- connection dimension: DN15

Technology

Air Power

Quick Clean

XXL Performance

Design awards

Designpreis Deutschland 2010 NOMINIERT

iF product design award 2009

Product image

Scale drawing

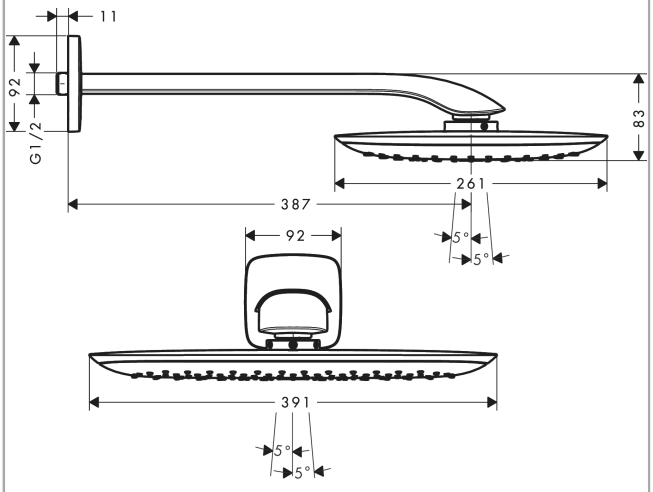

Flowchart

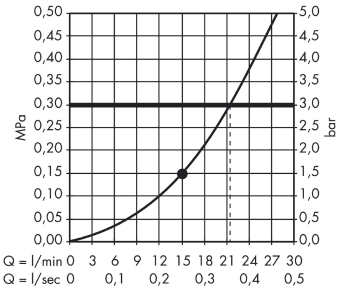

The consumption was measured in combination with the appropriate fittings (thermostat/mixer/in-wall valve) to reflect actual application in practice.